Product data sheet

Automation technology - Voltage and Power Supply

Product description	**M12 Male angled connector, Contacts: 2+PE, 4.0-6.0 mm, unshielded, screw clamp, IP67, UL**
Area	**M12-US**
Coding	**US-coded**
Series	**815**
Part no.	**99 2429 24 03**

Illustration (may vary)



Scale drawing

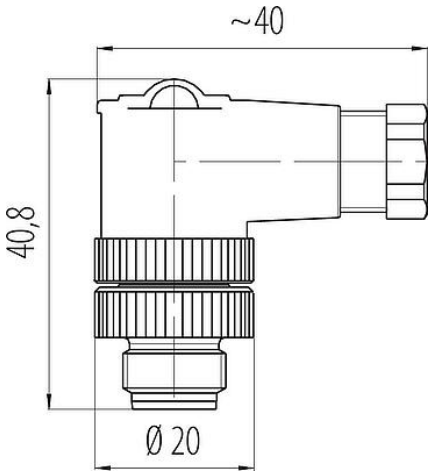

Contact arrangement (Plug-in side)

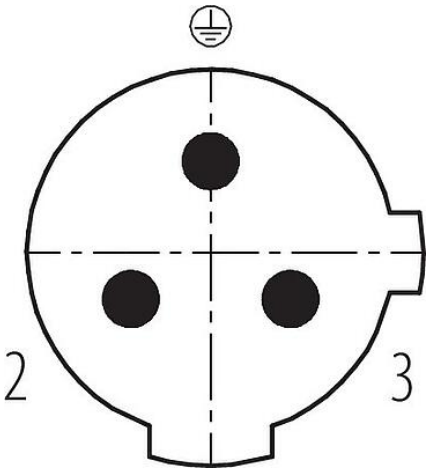

You can find the assembly instructions on the next page.

Technical data

General features

Part no.	99 2429 24 03
Connector design	Male angled connector
Type standard	DIN EN 61076-2-101
Coding	US-coded
Version	Connector pin angled
Connector locking system	screw
Termination	screw clamp
Degree of protection	IP67
Connection cross-section	max. 0.75 mm² / AWG 18
Cable outlet	4.0-6.0 mm
Twistability	90° (4 coding options)
Temperature range from/to	-25 °C / 85 °C
Mechanical operation	> 50 Mating cycles
Weight (g)	23.33
Customs tariff number	85369010
Country of Origin	DE

Electrical parameters

Rated voltage	250 V
Rated impulse voltage	2500 V

Product data sheet

Automation technology - Voltage and Power Supply

Product description	**M12 Male angled connector, Contacts: 2+PE, 4.0-6.0 mm, unshielded, screw clamp, IP67, UL**
Area	**M12-US**
Coding	**US-coded**
Series	**815**
Part no.	**99 2429 24 03**

Rated current	4.0 A
Insulation resistance	≥ 10^{10} Ω
Pollution degree	3
Overvoltage category	II
Insulating material group	II
EMC compliance	unshielded

Material

Housing material	PA
Contact body material	PA
Contact material	CuZn (brass)
Contact plating	CuSnZn (Optalloy)
REACH SVHC	CAS 7439-92-1 (Lead)
SCIP number	b904613e-95b6-4d2a-ae12-7022d4f78f22

Authorization/approvals

Approvals	UL

Classifications

eCl@ss 11.1	27-44-01-02
ETIM 9.0	EC002635

Declarations of conformity

Low Voltage Directive	EN 60529:1991 | EN 60204-1:2018

Trade-Compliance

Copper (9903.78.01)	0.000221 kg

Product data sheet

Automation technology - Voltage and Power Supply

Product description	**M12 Male angled connector, Contacts: 2+PE, 4.0-6.0 mm, unshielded, screw clamp, IP67, UL**
Area	**M12-US**
Coding	**US-coded**
Series	**815**
Part no.	**99 2429 24 03**

Assembly instructions

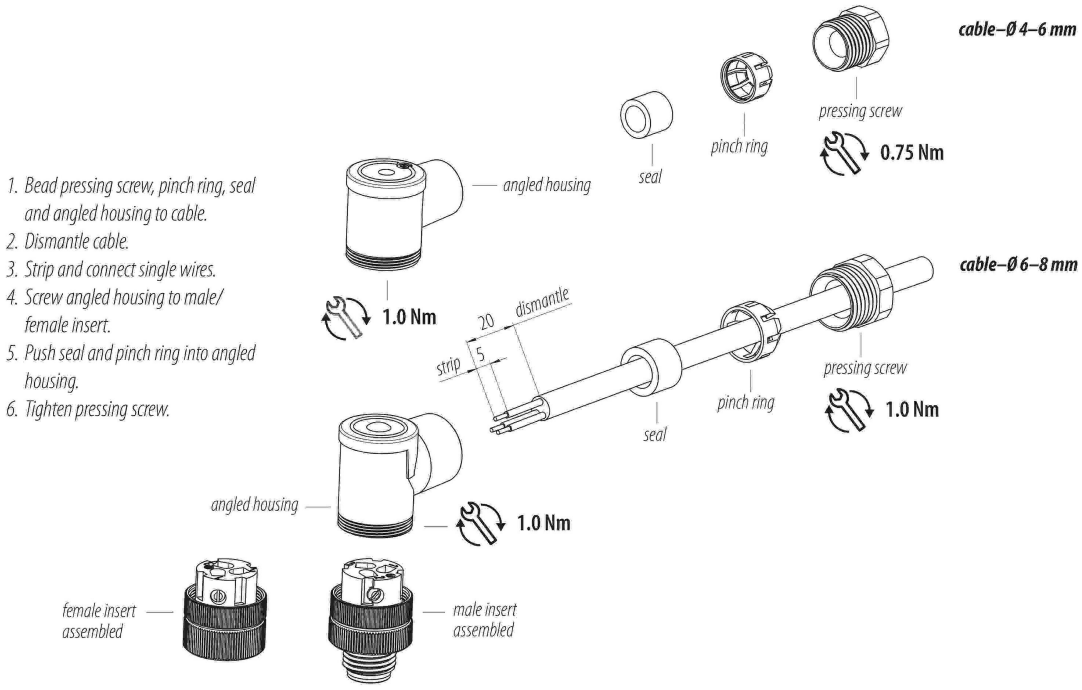

Date: 03.10.2026

Product data sheet

Automation technology - Voltage and Power Supply

Product description	**M12 Male angled connector, Contacts: 2+PE, 4.0-6.0 mm, unshielded, screw clamp, IP67, UL**
Area	**M12-US**
Coding	**US-coded**
Series	**815**
Part no.	**99 2429 24 03**

Security notices

The connector must not be plugged or unplugged under load. Non-observance and improper use can result in personal injury.

The connectors have been developed for applications in plant engineering, control and electrical equipment construction. The user is responsible for checking whether the connectors can also be used in other areas of application.

To protect against unintentional opening of the connector, the thread between the housing and the connector head must be secured with a suitable cyanoacrylate adhesive when used in circuits with voltages dangerous to the touch. This does not apply to connectors used in SELV and PELV circuits according to IEC 61140 (EN 61140, VDE 0140-1).

Connectors which are used in circuits with voltages dangerous to the touch may only be installed and used by, or under the supervision of, persons with electrical engineering training, taking into account the applicable regulations and standards.

The user must take suitable safety precautions to ensure that the connector cannot be accidentally disconnected.

Plug connectors with enclosure protection IP67 and IP68 are not suitable for use under water. When used outdoors, the plug connectors must be protected separately against corrosion. For further information on the IP protection classes, please refer to the "Technical Information" download centre.

Please observe the pollution degree and the overvoltage category. For further information, please refer to the download center "Technical Information".

To lock the cable connector with the device connector, the threaded ring is tightened "hand-tight" (approx. 60 cNm).