Product data sheet
Subminiature connectors

Product description	**Bayonet Male cable connector, Contacts: 5, 3.0-5.0 mm, solder, IP67**
Area	**Bayonet NCC**
Series	**670**
Part no.	**99 0759 010 05**

Illustration (may vary)



Scale drawing

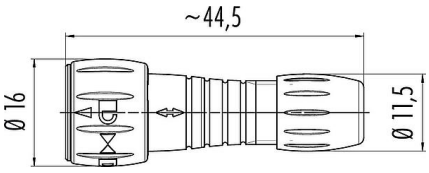

You can find the assembly instructions on the next page.

Technical data

General features

Part no.	99 0759 010 05
Connector design	Male cable connector
Version	Connector pin straight
Connector locking system	Bayonet
Termination	solder
Degree of protection	IP67
Connection cross-section	0.25 mm² / AWG 24
Cable outlet	3.0-5.0 mm
Temperature range from/to	-25 °C / 85 °C
Mechanical operation	> 1000 Mating cycles
Weight (g)	4.44
Customs tariff number	85369010
Country of Origin	DE

Electrical parameters

Rated voltage	50 V
Rated impulse voltage	500 V
Rated current	2.0 A
Pollution degree	2
Overvoltage category	II
Insulating material group	II

Material

Housing material	PA
Contact body material	PA

Product data sheet
Subminiature connectors

Product description	**Bayonet Male cable connector, Contacts: 5, 3.0-5.0 mm, solder, IP67**
Area	**Bayonet NCC**
Series	**670**
Part no.	**99 0759 010 05**

Contact material	CuZn (brass)
Contact plating	Au (gold)
REACH SVHC	CAS 7439-92-1 (Lead)
SCIP number	bfeaaeba-ef26-4742-b70f-c783746fdf45

Classifications

eCl@ss 11.1	27-44-01-02
ETIM 9.0	EC002635

Trade-Compliance

Copper (9903.78.01)	0.000221 kg

Assembly instructions

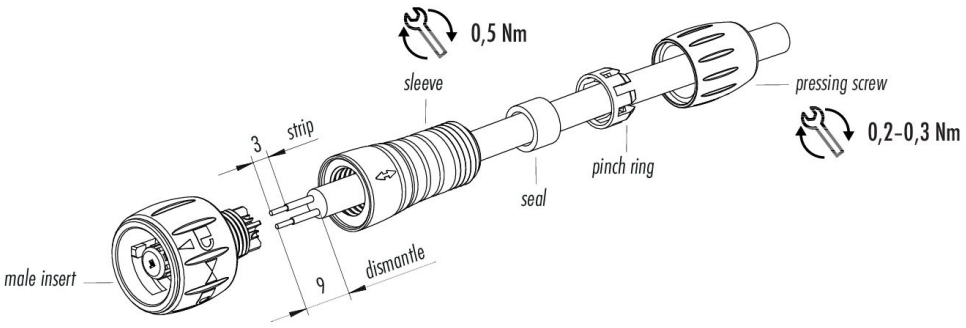

Product data sheet
Subminiature connectors

Product description	**Bayonet Male cable connector, Contacts: 5, 3.0-5.0 mm, solder, IP67**
Area	**Bayonet NCC**
Series	**670**
Part no.	**99 0759 010 05**

Security notices

The connector must not be plugged or unplugged under load. Non-observance and improper use can result in personal injury.

The connectors have been developed for applications in plant engineering, control and electrical equipment construction. The user is responsible for checking whether the connectors can also be used in other areas of application.

To protect against unintentional opening of the connector, the thread between the housing and the connector head must be secured with a suitable cyanoacrylate adhesive when used in circuits with voltages dangerous to the touch. This does not apply to connectors used in SELV and PELV circuits according to IEC 61140 (EN 61140, VDE 0140-1).

Connectors which are used in circuits with voltages dangerous to the touch may only be installed and used by, or under the supervision of, persons with electrical engineering training, taking into account the applicable regulations and standards.

The user must take suitable safety precautions to ensure that the connector cannot be accidentally disconnected.

Plug connectors with enclosure protection IP67 and IP68 are not suitable for use under water. When used outdoors, the plug connectors must be protected separately against corrosion. For further information on the IP protection classes, please refer to the "Technical Information" download centre.

Please observe the pollution degree and the overvoltage category. For further information, please refer to the download center "Technical Information".