Product data sheet

Miniature connectors

Product description	**M16 Male angled connector, Contacts: 6 (06-a), 4.0-6.0 mm, unshielded, solder, IP67**
Area	**M16 IP67**
Series	**723**
Part no.	**99 0121 106 06**

Illustration (may vary)



Scale drawing

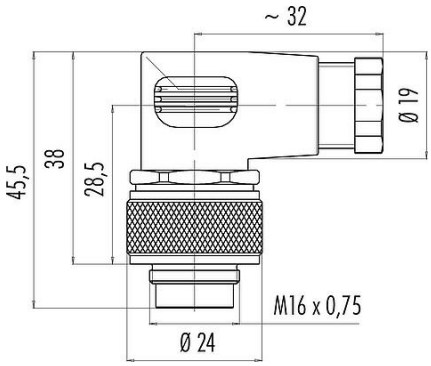

Contact arrangement (Plug-in side)

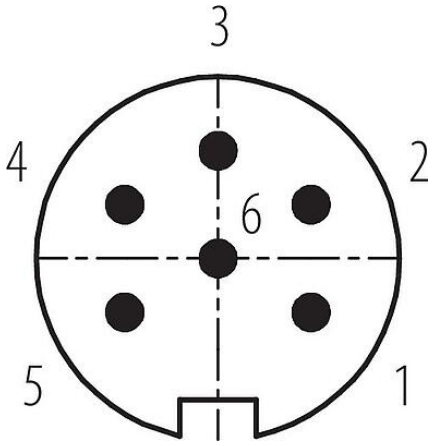

You can find the assembly instructions on the next page.

Technical data

General features

Part no.	99 0121 106 06
Connector design	Male angled connector
Type standard	DIN EN 61076-2-106
Version	Connector pin angled
Connector locking system	screw
Termination	solder
Degree of protection	IP67
Connection cross-section	max. 0.75 mm² / AWG 18
Cable outlet	4.0-6.0 mm
Twistability	90° (4 coding options)
Temperature range from/to	-40 °C / 95 °C
Mechanical operation	> 500 Mating cycles
Weight (g)	36.35
Customs tariff number	85369010
Country of Origin	DE

Electrical parameters

Rated voltage	250 V
Rated impulse voltage	1500 V
Rated current	5.0 A
Insulation resistance	≥ 10^{10} Ω
Pollution degree	1
Overvoltage category	I

Product data sheet
Miniature connectors

Product description	**M16 Male angled connector, Contacts: 6 (06-a), 4.0-6.0 mm, unshielded, solder, IP67**
Area	**M16 IP67**
Series	**723**
Part no.	**99 0121 106 06**

Insulating material group	III
EMC compliance	unshielded

Material

Housing material	PA
Contact body material	PBT (UL94 V-0)
Contact material	CuZn (brass)
Contact plating	Ag (silver)
REACH SVHC	CAS 7439-92-1 (Lead)
SCIP number	69f78222-7c32-4954-86cd-0ec82c50e19a

Classifications

eCl@ss 11.1	27-44-01-02
ETIM 9.0	EC002635

Declarations of conformity

Low Voltage Directive	EN 60529:1991 | EN 60204-1:2018

Assembly instructions

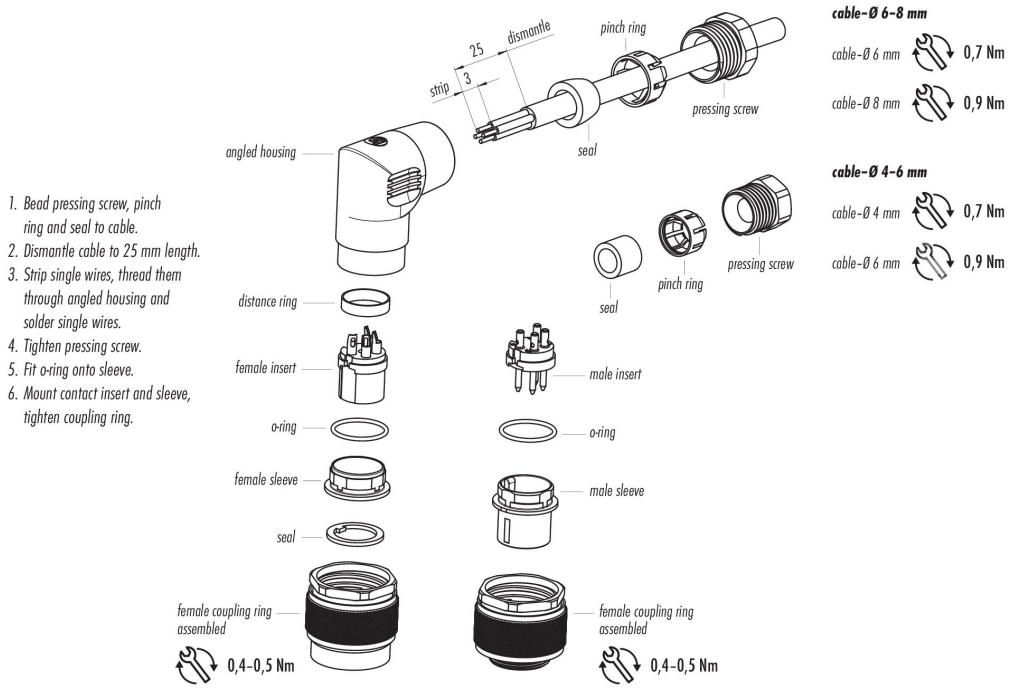

Product data sheet

Miniature connectors

Product description	**M16 Male angled connector, Contacts: 6 (06-a), 4.0-6.0 mm, unshielded, solder, IP67**
Area	**M16 IP67**
Series	**723**
Part no.	**99 0121 106 06**

Security notices

The connector must not be plugged or unplugged under load. Non-observance and improper use can result in personal injury.

The connectors have been developed for applications in plant engineering, control and electrical equipment construction. The user is responsible for checking whether the connectors can also be used in other areas of application.

To protect against unintentional opening of the connector, the thread between the housing and the connector head must be secured with a suitable cyanoacrylate adhesive when used in circuits with voltages dangerous to the touch. This does not apply to connectors used in SELV and PELV circuits according to IEC 61140 (EN 61140, VDE 0140-1).

Connectors which are used in circuits with voltages dangerous to the touch may only be installed and used by, or under the supervision of, persons with electrical engineering training, taking into account the applicable regulations and standards.

The user must take suitable safety precautions to ensure that the connector cannot be accidentally disconnected.

Plug connectors with enclosure protection IP67 and IP68 are not suitable for use under water. When used outdoors, the plug connectors must be protected separately against corrosion. For further information on the IP protection classes, please refer to the "Technical Information" download centre.

Please observe the pollution degree and the overvoltage category. For further information, please refer to the download center "Technical Information".

The protection class specification applies on condition that the four mounting holes are made as blind holes.