Product data sheet

Automation technology - Voltage and Power Supply

Product description	**7/8" Female panel mount connector, Contacts: 4+PE, unshielded, THT, IP68, UL 2238, VDE, Front mounting, potted**
Area	**7/8"**
Series	**820**
Part no.	**09 2450 330 05**

Illustration (may vary)



Conductor layout

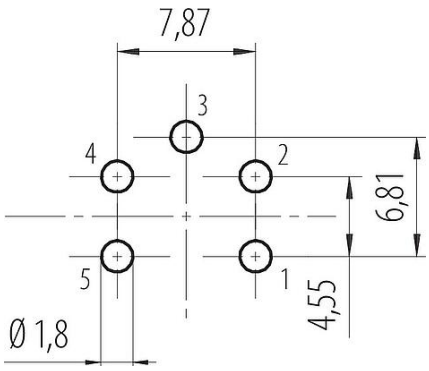

Scale drawing

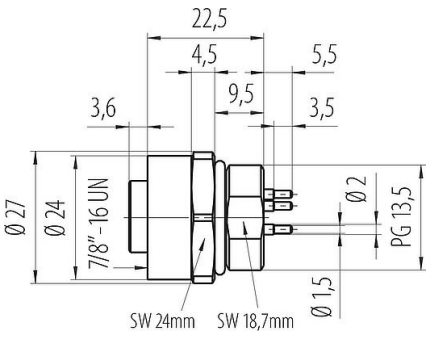

Contact arrangement (Plug-in side)

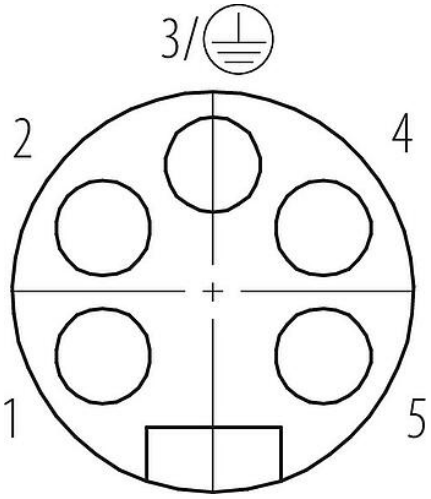

Technical data

General features

Part no.	09 2450 330 05
Connector design	Female panel mount connector
Version	Connector socket straight
Connector locking system	screw

Product data sheet

Automation technology - Voltage and Power Supply

Product description	**7/8" Female panel mount connector, Contacts: 4+PE, unshielded, THT, IP68, UL 2238, VDE, Front mounting, potted**
Area	**7/8"**
Series	**820**
Part no.	**09 2450 330 05**

Termination	THT
Degree of protection	IP68
Connection cross-section	0.75 mm² / AWG 18
Temperature range from/to	-25 °C / 85 °C
Mechanical operation	> 100 Mating cycles
Weight (g)	35.00
Customs tariff number	85369010
Country of Origin	DE

Electrical parameters

Rated voltage	300 V (600 V UL)
Rated impulse voltage	4000 V
Rated current	8.0 A
Pollution degree	3
Overvoltage category	III
Insulating material group	I
EMC compliance	unshielded

Material

Housing material	Zinc die-cast nickel-plated
Contact body material	PUR
Contact material	CuZn (brass)
Contact plating	Au (gold)
REACH SVHC	CAS 7439-92-1 (Lead)
SCIP number	3554efe9-73eb-493c-b9a2-22ee137931cc

Authorization/approvals

Approvals	UL 2238, VDE

Classifications

eCl@ss 11.1	27-44-01-09
ETIM 9.0	EC003569

Product data sheet

Automation technology - Voltage and Power Supply

Product description	**7/8" Female panel mount connector, Contacts: 4+PE, unshielded, THT, IP68, UL 2238, VDE, Front mounting, potted**
Area	**7/8"**
Series	**820**
Part no.	**09 2450 330 05**

Security notices

The connector must not be plugged or unplugged under load. Non-observance and improper use can result in personal injury.

The connectors have been developed for applications in plant engineering, control and electrical equipment construction. The user is responsible for checking whether the connectors can also be used in other areas of application.

Connectors which are used in circuits with voltages dangerous to the touch may only be installed and used by, or under the supervision of, persons with electrical engineering training, taking into account the applicable regulations and standards.

The user must take suitable safety precautions to ensure that the connector cannot be accidentally disconnected.

Plug connectors with enclosure protection IP67 and IP68 are not suitable for use under water. When used outdoors, the plug connectors must be protected separately against corrosion. For further information on the IP protection classes, please refer to the "Technical Information" download centre.

Please observe the pollution degree and the overvoltage category. For further information, please refer to the download center "Technical Information".

To lock the cable connector to the device connector, we recommend tightening the threaded ring to 1.5 Nm. A suitable torque wrench is available as an accessory (order no. 07 0082 000).